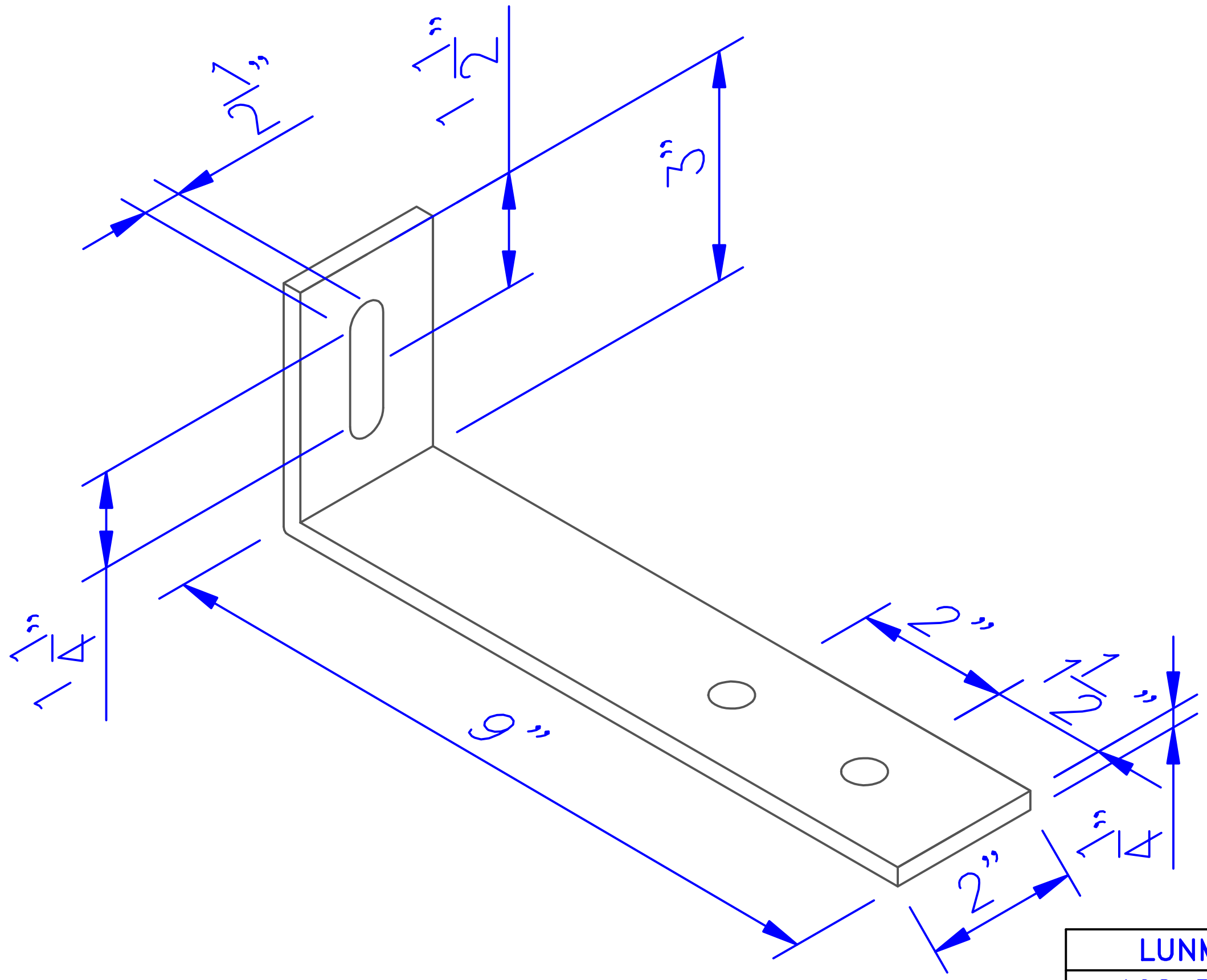


| | |
|---|---|
| LUNMAR BOAT LIFTS | |
| 108 BEARING BRACKET | |
| DATE 06/20/2008 | NAME EUNYOUNG JUNG |
| SCALE AS SHOWN | DWG NO. EX. |